PT8CN

CANbus • SAE J1939 Output Signal

Industrial Grade String Pot
Absolute Linear Position to 60 inches (1524 mm)
Aluminum or Stainless Steel Enclosure Options
NEMA 6 / IP67

GENERAL

Full Stroke Ranges	0-2 to 0-60 inches
Electrical Interface	CANbus SAE J1939
Protocol	Proprietary B
Accuracy	see ordering information
Repeatability	± 0.02% full stroke
Resolution	± 0.003% full stroke
Measuring Cable Options	stainless steel or thermoplastic
Enclosure Material	powder-painted aluminum or stainless steel
Sensor	plastic-hybrid precision potentiometer
Potentiometer Cycle Life	see ordering information
Maximum Retraction Acceleration	see ordering information
Weight, Aluminum (Stainless Steel) Enclosure	3 lbs. (6 lbs.), max.

ELECTRICAL

Input Voltage	7 - 18 VDC
Input Current	60 mA max.
Baud Rate	125K, 250K, or 500K via DIP switches
Update Rate	10 ms. (20 ms. available, contact factory)

ENVIRONMENTAL

Environmental Suitability	NEMA 4X/6, IP 67
Operating Temperature	-40° to 185°F (-40° to 85°C)
Vibration	up to 10 g to 2000 Hz maximum

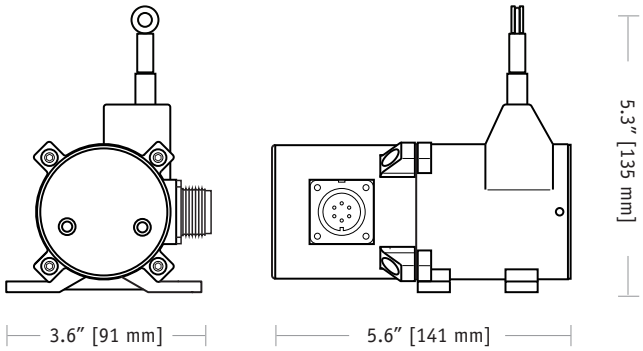

The PT8CN, using a high cycle plastic-hybrid potentiometer, communicates to your PLC via the CANbus SAE J1939 interface. Suitable for factory and harsh environment applications requiring linear position feedback in ranges up to 60".

As a member of Celesco's innovative family of NEMA 4 rated cable-extension transducers, the PT8CN installs in minutes by simply mounting it's body to a fixed surface and attaching it's cable to the movable object. Perfect parallel alignment not required.

Output Signal:

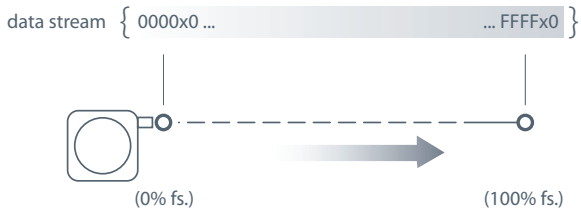

20630 Plummer Street • Chatsworth, CA 91311
tel: 800.423.5483 • +1.818.701.2750 • fax: +1.818.701.2799
measurement SPECIALTIES™
celesco
celesco.com • info@celesco.com

I/O Format and Settings

Interframe Space	Start of Frame	Identifier	RTR Bit	Control Field	Data Field	CRC Sequence	CRC Delimiter	Ack Slot	Ack Delimiter	End of Frame	Interframe Space
	1 bit	29 bits	1 bit	6 bits	0-8 bytes	15 bits	1 bit	1 bit	1 bit	7 bits	3 bits

repetition = 8 msec.

• Identifier

	Message Priority			Future Use		J1939 Reference Proprietary B								Data Field Type*								Not Used		Node ID**					
Example –	1	0	0	0	0	1	1	1	1	1	1	1	1	0	1	0	1	0	0	1	1	0	0	1	1	1	1	1	1
Identifier Bit No. –	28	27	26	25	24	23	22	21	20	19	18	17	16	15	14	13	12	11	10	9	8	7	6	5	4	3	2	1	0
Hex Value –		0				F				F				5				3				3				F			

*Sensor field data can be factory set to customer specific value. **Customer defined, set via Dips 1-6. Bit values shown for example only, see **Address Setting** below.

• Data Field

B_0 = LSB current % of measurement range byte
B_1 = MSB current % of measurement range byte

B_2 = LSB current measurement count byte
B_3 = MSB current measurement count byte

B_4 = error flag
B_5 = error flag

B_6 = LSB velocity data byte
B_7 = MSB velocity data byte

Velocity Data		Error Flags		Current Measurement Count		Current % of Measurement Range	
B_7	B_6	B_5	B_4	B_3	B_2	B_1	B_0

B_7	B_6	B_5	B_4	B_3	B_2	B_1	B_0

Current Measurement Count

The **C**urrent **M**easurement **C**ount (**CMC**) is the output data that indicates the present position of the measuring cable. The CMC is a 16-bit value that occupies bytes B_2 and B_3 of the data field. B_2 is the **LSB** (least significant byte) and B_3 is the **MSB** (most significant byte).

The **CMC** starts at **0x0000** with the measuring cable fully retracted and continues upward to the end of the stroke range stopping at **0xFFFF**. This holds true for all ranges.

Converting CMC to Linear Measurement

To convert the current measurment count to inches or millimeters, simply divide the count by 65,535 (total counts over the range) and then multiply that value by the full stroke range:

$$\left(\frac{\text{current measurement count}}{65{,}535}\right) \times \text{full stroke range}$$

Sample Conversion:

If the full stroke range is **30 inches** and the current position is **0x0FF2** (4082 Decimal) then,

$$\left(\frac{4082}{65{,}535}\right) \times 30.00 \text{ inches} = 1.87 \text{ inches}$$

If the full stroke range is **625 mm** and the current position is **0x0FF2** (4082 Decimal) then,

$$\left(\frac{4082}{65{,}535}\right) \times 625 \text{ mm} = 39 \text{ mm}$$

B_7	B_6	B_5	B_4	B_3	B_2	B_1	B_0

Current % of Measurement Range

The Current % of Measurement Range is a 2-byte value that expresses the current linear position as a percentage of the entire full stroke range. Resolution is **.1 %** of the full stroke measurement range.

This value starts at **0x0000** at the beginning of the stroke and ends at **0x03E8**.

Example:

Hex	Decimal	Percent
0000	0000	0.0%
0001	0001	0.1%
0002	0002	0.2%
...	...	...
03E8	1000	100.0%

B_7	B_6	B_5	B_4	B_3	B_2	B_1	B_0

Error Flags

0x55 (yellow LED on controller board) indicates that the sensor has begun to travel beyond the calibrated range of the internal position potentiometer.

0xAA (red LED on controller board) indicates that the sensor has moved well beyond the calibrated range of the internal position potentiometer.

If either error flag occurs within the full stroke range of the sensor, the unit should be returned to the factory for repair and recalibration.

B_7	B_6	B_5	B_4	B_3	B_2	B_1	B_0

Velocity

Data in bytes B_7 - B_6 is the change in the **CMC** (current measurement count) over a 100 msec time period. This data can then be used to calculate velocity in a post processing operation.

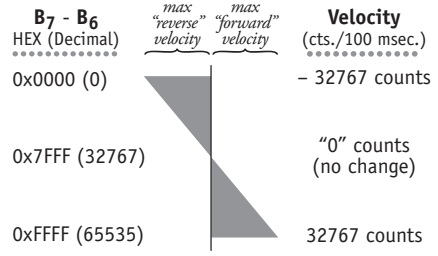

Velocity Calculation

$$\left(\frac{\text{count change} - 32767}{.1 \text{ sec. time period}}\right) \times \left(\frac{\text{full stroke range}}{65{,}535}\right)$$

Sample Calculations

Cable Extension (positive direction):

B_7–B_6 = 0x89C6 (43462 Dec), **full stroke = 60 in.**

$$\left(\frac{35270 - 32767}{.1 \text{ sec}}\right) \times \left(\frac{60 \text{ in.}}{65{,}535}\right) = 22.92 \text{ in. / sec.}$$

Cable Retraction (negative direction):

B_7–B_6 = 0x61A8 (25000 Dec), **full stroke = 60 in.**

$$\left(\frac{25000 - 32767}{.1 \text{ sec}}\right) \times \left(\frac{60 \text{ in.}}{65{,}535}\right) = -71.11 \text{ in. / sec.}$$

Setting the Address (Node ID) and Baud Rate

Address Setting (Node ID)

The Address Setting (Node ID) is set via 6 switches located on the 8-pole DIP switch found on the DeviceNET controller board located inside the transducer.

The DIP switch settings are binary starting with switch number **1** (= 2^0) and ending with switch number **6** (= 2^5).

Baud Rate

The transmission baud rate may be either factory preset at the time of order or set manually at the time of installation.

The baud rate can be set using switches **7** & **8** on the 8-pole DIP switch found on the DeviceNET controller board located inside the transducer.

CANBus Controller Board

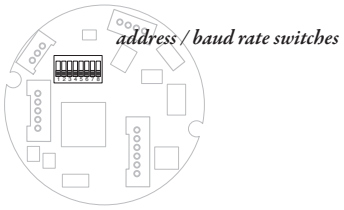

DIP-1 (2^0)	DIP-2 (2^1)	DIP-3 (2^2)	DIP-4 (2^3)	DIP-5 (2^4)	DIP-6 (2^5)	*address* (decimal)
0	0	0	0	0	0	0
1	0	0	0	0	0	1
0	1	0	0	0	0	2
...	...	...	...	...	...	...
1	1	1	1	1	1	63

DIP-7	DIP-8	baud rate
0	0	125k
1	0	250k
0	1	500k
1	1	125k

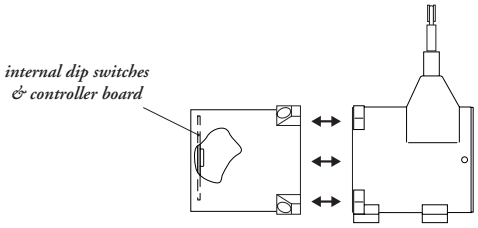

to gain access to the controller board, remove four Allen-Head Screws and remove rear cover.

Outline Drawing:

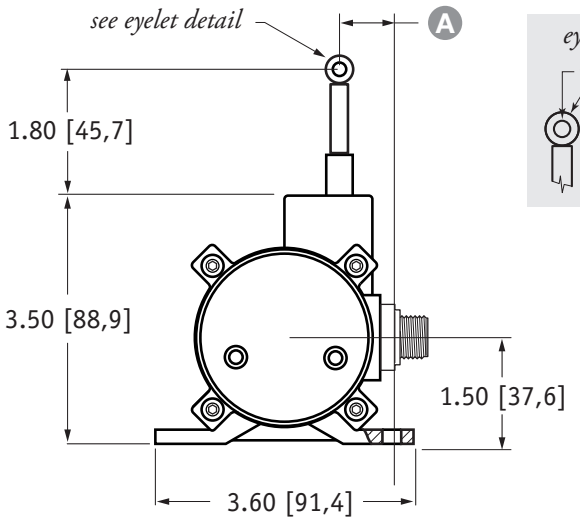

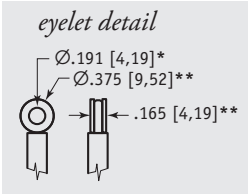

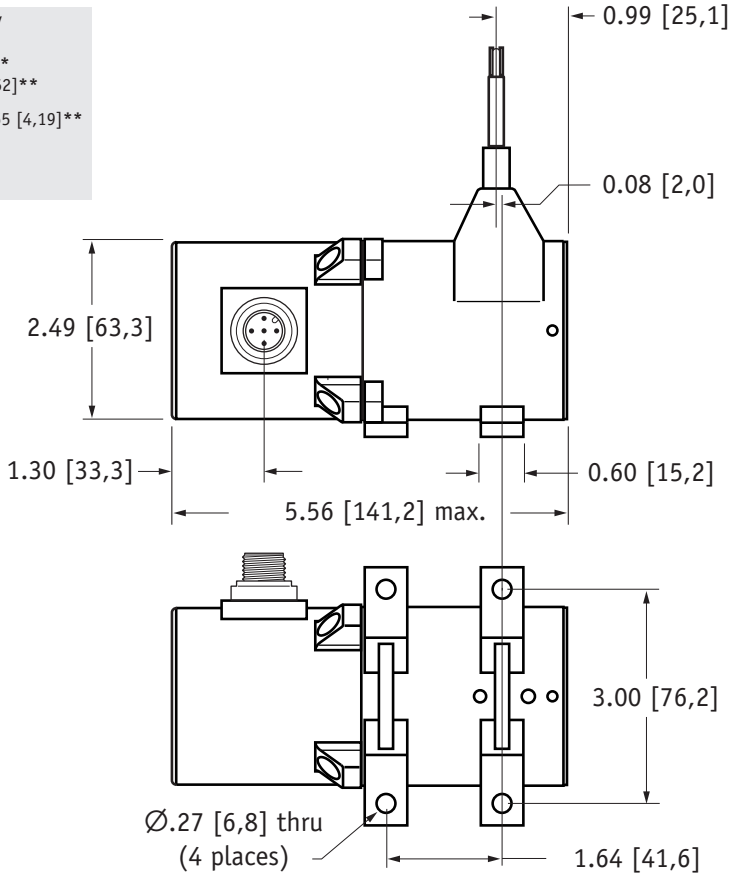

RANGE	A
2″, 10″	1.16 [29,5]
5″, 25″, 50″	0.66 [16,8]
15″	0.99 [25,7]
20″, 40″	0.85 [21,6]
30″, 60″	0.52 [13,3]

DIMENSIONS ARE IN INCHES [MM]
tolerances are ±0.02 in. [±0,5 mm] unless otherwise noted

note: *tolerance = +.005 −.001 [+.13 −.03] **tolerance = +.005 −.005 [+.13 −.13]

Ordering Information:

Model Number:

PT8CN - _____ - ___ - ___ - ___ - ___ - **J** - ___ - ___ - ___
order code: Ⓡ Ⓐ Ⓑ Ⓒ Ⓓ Ⓔ Ⓕ Ⓖ Ⓗ

Sample Model Number:

PT8CN - 50 - AL - N34 - T1 - CG - J - 500 - 32 - SC5

Ⓡ	range:	50 inches
Ⓐ	enclosure	aluminum
Ⓑ	measuring cable:	.034 nylon-coated stainless
Ⓒ	measuring cable tension:	standard
Ⓓ	cable guide:	standard
Ⓔ	interface:	CANbus SAE J1939
Ⓕ	baud rate:	500 k bits/sec.
Ⓖ	node ID:	32 decimal
Ⓗ	electrical connection:	5-meter cordset with straight plug

Full Stroke Range:

Ⓡ order code:	2	5	10	15	20	25	30	40	50	60
full stroke range, min:	2 in.	5 in.	10 in.	15 in.	20 in.	25 in.	30 in.	40 in.	50	60
accuracy (% of f.s.):	0.25%	0.25%	0.15%	0.15%	0.15%	0.15%	0.15%	0.10%	0.10%	0.10%
potentiometer cycle life*:	2.5×10^6	2.5×10^6	5×10^5	5×10^5	5×10^5	5×10^5	5×10^5	2.5×10^5	2.5×10^5	2.5×10^5

**–1 cycle is defined as the travel of the measuring cable from full retraction to full extension and back to full retraction*

Enclosure Material:

Ⓐ order code:	AL	SS	316
	powder-painted aluminum	303 stainless steel	316 stainless steel

Measuring Cable:

Ⓑ order code:	N34	S47	V62
	Ø.034-inch nylon-coated stainless steel *available in all ranges*	Ø.047-inch stainless steel *5, 15, 20, 25, 30-inch ranges only*	Ø.062-inch thermoplastic *all ranges up to 30 inches only*

Measuring Cable Tension:

Ⓒ order code:	T1	T2	T3
	standard tension	medium tension	high tension
full stroke range cable tension specifications 2, 10-inch:	39 oz.	65 oz.	116 oz.
15-inch:	26 oz.	43 oz.	77 oz.
20, 40-inch:	20 oz.	33 oz.	60 oz.
5, 25, 50-inch:	16 oz.	26 oz.	47 oz.
30, 60-inch:	13 oz.	22 oz.	40 oz.
			tension tolerance: ± 50%
	maximum acceleration	*maximum acceleration*	*maximum acceleration*
aluminum enclosure:	15 g	25 g	40 g
stainless steel enclosure:	6 g	12 g	18 g

Cable Guide:

Ⓓ order code:	CG	SS	CB*	BR
	standard cable guide	stainless steel cable guide	polyurethane cable guide	integral cable brush

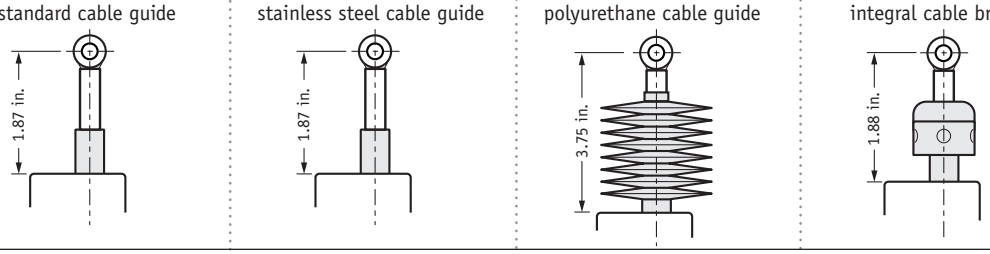

**note: all ranges up to 25 inches only*

Ordering Information (cont.):

Baud Rate:

F order code:	125	250	500
	125 kbaud	250 kbaud	500 kbaud

Node ID:

G order code:	0	1	2	...	62	63

select address (0 - 63 Decimal)

Electrical Connection:

H order code:	blank	MC5	SC5	NC5
	5-pin micro-connector *(no mating plug supplied)*	5-pin micro-connector w/ mating plug	5-pin micro-connector and 5 meter length cordset w/straight mating plug	5-pin micro-connector and 5 meter length cordset w/90° mating plug

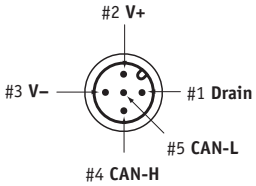

connector
(contact view)

0.16" - 0.32" OD Cable (THIN)

length: 16ft [5M]
cable: Thin

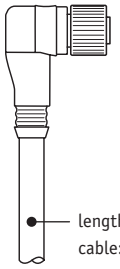

length: 16ft [5M]
cable: Thin

mating plug
(contact view)

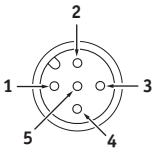

pin	signal	wire color
1	drain	brown
2	V+	white
3	V-	blue
4	Can-H	black
5	Can-L	grey

version: **9.0** last updated: **October 2, 2012**

Cable Guide Options:

Ⓖ order code:	0	1	2*	3
	standard cable guide	stainless steel cable guide	polyurethane cable bellows	integral cable brush

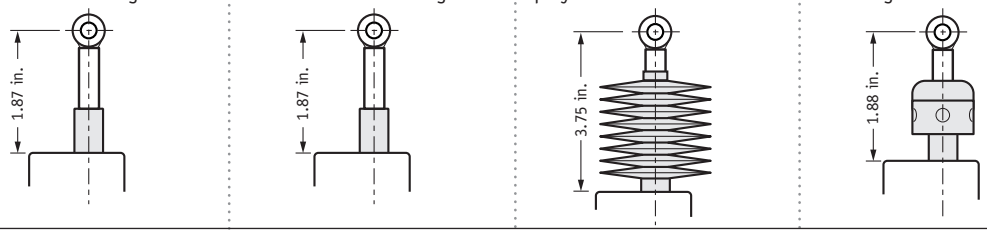

**note: all ranges up to 25 inches only*

Output Signal Selection:

The output signal direction can be reversed at any time by simply changing the dip-switch settings found on the internal signal board. After the settings have been changed, adjustment of the Zero and Span trimpots will be required to precisely match signal values to the beginning and end points of the stroke.

output signal | *switch setting* | *signal board*

0...20 mA
or
4...20 mA

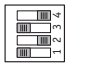

20...0 mA
or
20...4 mA

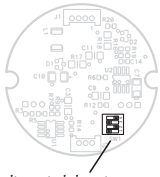

dip-switch location

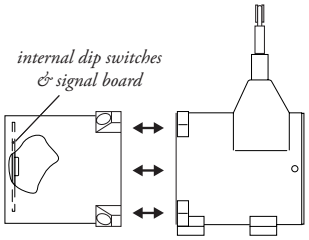

To gain access to the signal board, remove four Allen-Head Screws and remove rear cover.